Contract No. C2017-043.2

SECOND AMENDMENT
TO
COOPERATIVE PURCHASING AGREEMENT
BETWEEN
THE TOWN OF FOUNTAIN HILLS
AND
INTERWEST SAFETY SUPPLY LLC.

THIS SECOND AMENDMENT TO COOPERATIVE PURCHASING AGREEMENT (this "First Amendment") is entered into as of June 19, 2018, between the Town of Fountain Hills, an Arizona municipal corporation (the "Town"), and Interwest Safety Supply LLC, a Delaware limited liability company (the "Contractor").

RECITALS

A. After a competitive procurement process, the City of Peoria ("CITY") entered into Contract No. ACON2816 with Desert Highway Signs Inc., an Arizona corporation ("Desert"), with an effective date of June 24, 2016, as amended (collectively, the "City Contract"). The City Contract is incorporated herein by reference to the extent not inconsistent with this Agreement.

B. The Town and Desert entered into a Cooperative Purchasing Agreement (Contract No. C0217-043), dated September 15, 2016, as amended by that certain letter agreement dated June 20, 2017 (collectively, the "Agreement") (attached hereto as Exhibit "A"), based upon the City Contract, for Desert to provide the Town with street signs and hardware (the "Materials and Services"). All capitalized terms not otherwise defined in this Second Amendment have the same meanings as contained in the Agreement.

C. Contractor is the successor-in-interest to Desert and agrees to the terms and conditions of the City Contract and Agreement.

D. The Town has determined that additional Materials and Services from Contractor are necessary (the "Additional Services").

D. The Town and Contractor desire to enter into this Second Amendment to extend the term of the Agreement and increase the compensation authorized by the Agreement for the Additional Services.

AGREEMENT

NOW, THEREFORE, in consideration of the foregoing introduction and recitals, which are incorporated herein by reference, the following mutual covenants and conditions, and

other good and valuable consideration, the receipt and sufficiency of which are hereby acknowledged, the Town and Contractor hereby agree as follows:

1. Term of the Agreement. Notwithstanding any provision of the Agreement to the contrary, the term of the Agreement is hereby extended and the Agreement shall remain in full force and effect until June 23, 2019, unless terminated as otherwise provided pursuant to the terms and conditions of the Agreement.

2. Compensation. The Town is authorized to pay Contractor a total amount not to exceed $20,000.00 for the Additional Services, in accordance with the terms of this paragraph. The effect of this Second Amendment is to increase the aggregate not-to-exceed compensation under the Agreement (including all renewal terms) from $40,000.00 to $60,000.00.

3. Effect of Amendment. In all other respects, the Agreement is affirmed and ratified and, except as expressly modified herein, all terms and conditions of the Agreement shall remain in full force and effect.

4. Non-Default. By executing this Second Amendment, Contractor affirmatively asserts that (i) the Town is not currently in default, nor has been in default at any time prior to this First Amendment, under any of the terms or conditions of the Agreement and (ii) any and all claims, known and unknown, relating to the Agreement and existing on or before the date of this Second Amendment are forever waived.

5. Israel. Contractor certifies that it is not currently engaged in, and agrees for the duration of this Agreement that it will not engage in a "boycott," as that term is defined in ARIZ. REV. STAT. § 35-393, of Israel.

6. Conflict of Interest. This First Amendment and the Agreement may be canceled by the Town pursuant to ARIZ. REV. STAT. § 38-511.

[SIGNATURES ON FOLLOWING PAGES]

IN WITNESS WHEREOF, the parties hereto have executed and caused to be signed by their duly authorized representatives, this instrument on the date first written above.

FOR THE TOWN OF FOUNTAIN HILLS:

Linda M. Kavanagh, Mayor

ATTESTED TO:

Bevelyn J. Bender, Town Clerk

REVIEWED BY:

Grady E. Miller, Town Manager

APPROVED AS TO FORM:

Mitesh V. Patel, Interim Town Attorneys, Dickinson Wright PLLC

[SIGNATURES CONTINUE ON FOLLOWING PAGE]

"Contractor"

INTERWEST SAFETY SUPPLY, LLC
a Delaware limited liability company

By: _____

Name: _____

Its: _____

(ACKNOWLEDGEMENT)

STATE OF ARIZONA)
) ss.
COUNTY OF MARICOPA)

On June 7, 2018, before me personally appeared _____ the _____ of Interwest Safety Supply LLC, a Delaware limited liability corporation, whose identity was proven to me on the basis of satisfactory evidence to be the person who he claims to be, and acknowledged that he signed the above document, on behalf of Interwest Safety Supply LLC.

_____
Notary Public

(Affix notary seal here)

BENNY MAZARIEGOS
NOTARY PUBLIC
COMM. EXP. 04-20-2021
MARICOPA COUNTY, ARIZONA

EXHIBIT A
TO
SECOND AMENDMENT
TO
COOPERATIVE PURCHASING AGREEMENT
BETWEEN
THE TOWN OF FOUNTAIN HILLS
AND
INTERWEST SAFETY SUPPLY, LLC

[C2017-43]

See following pages.

City of Peoria, Arizona

Notice of Invitation for Bid

Invitation for Bid No: **P16-0065**

Bid Due Date: **June 9, 2016**

Materials and/or Services: **Street Signs and Hardware**

Time: 2:00 P.M. AZ Time

Contact: **Terry Andersen**

Location: City of Peoria, Materials Management

Phone: (623) 773-7115

Mailing Address: 9875 N. 85th Avenue, 2nd Floor, Peoria, AZ 85345

In accordance with City of Peoria Procurement Code competitive sealed bids for the material or services specified will be received by the City of Peoria Materials Management at the specified location until the date and time cited above. Bids received by the correct date and time shall be publicly opened and the bid price read. Bids shall be in the actual possession of the City of Peoria Materials Management on *or prior* to the exact date and time indicated above. Late bids will not be considered, except as provided in the City of Peoria Procurement Code. ***Bids shall be submitted in a sealed envelope with the Invitation for Bid number and the bidder's name and address clearly indicated on the front of the envelope.*** All bids shall be completed in ink or typewritten. Bidders are strongly encouraged to carefully read the ***entire*** Invitation for Bid Package.

OFFER

To the City of Peoria:

The undersigned hereby offers and agrees to furnish materials and/or services in compliance with all terms, conditions, specifications and amendments in the Notice of Invitation for Bid except for any written exceptions in the offer. The signature below also certifies his or her understanding and compliance with paragraph one of The City of Peoria Standard Terms and Conditions (COP Form 202).

For clarification of this offer contact:

Telephone: 623-215-7332 Fax: 243-5706

Name: Kevin DeRuiter

Email: Kevin@desserthighwaysigns.com

Desert Highway Signs Inc
Company Name

Authorized Signature for Offer

7150 W Roosevelt st B-137
Address

Kevin DeRuiter
Printed Name

Phoenix AZ 85043
City State Zip Code

President
Title

ACCEPTANCE OF OFFER AND CONTRACT AWARD (For City of Peoria Use Only)

Your offer is hereby accepted. The Contractor is now bound to sell the materials and/or services listed by the attached award notice based upon the solicitation, including all terms conditions, specifications, amendments, etc., and the Contractor's offer as accepted by the City. The Contractor is hereby cautioned not to commence any billable work or provide any material, service or construction under this contract until Contractor receives an executed ***Purchase Order.***

Attested by:

Rhonda Geriminsky, City Clerk

CC

ACON 26816
Contract Number

Official File

City of Peoria, Arizona. Eff. Date: 6/24/16

Approved as to form:

City Attorney

Awarded on June 22 2016

Dan Zenko, Materials Manager

City Seal

Copyright 2003 City of Peoria, Arizona

ACON26816.

STANDARD TERMS AND CONDITIONS

Materials Management Procurement
9875 N. 85th Ave., 2nd Fl.
Peoria, Arizona 85345-6560
Phone: (623) 773-7115
Fax: (623) 773-7118

1. **PREPARATION OF BID:**

   a. All bids shall be on the forms provided in this *Invitation to Bid* package. It is permissible to copy these forms if required. Telegraphic (facsimile) or mailgram bids will not be considered.

   b. The Offer and Contract Award document (COP Form 203) shall be submitted with an original ink signature by a person authorized to sign the offer.

   c. Erasures, interlineations, or other modifications in the bid shall be initialed in original ink by the authorized person signing the Vendor Offer.

   d. If price is a consideration and in case of error in the extension of prices in the bid, the unit price shall govern. No bid shall be altered, amended, or withdrawn after the specified bid due date and time.

   e. Periods of time, stated as a number of days, shall be calendar days.

   f. It is the responsibility of all Offerors to examine the entire *Invitation For Bid* package and seek clarification of any item or requirement that may not be clear and to check all responses for accuracy before submitting a bid. Negligence in preparing a Bid confers no right of withdrawal after bid due date and time.

2. **INQUIRIES:** Any question related to the *Invitation For Bid* shall be directed to the Buyer whose name appears on the front. The Offeror shall not contact or ask questions of the department for which the requirement is being procured. Questions should be submitted in writing when time permits. The Buyer may require any and all questions be submitted in writing at the Buyer's sole discretion. Any correspondence related to a *Invitation For Bid* should refer to the appropriate *Invitation For Bid* number, page, and paragraph number. However, the Offeror shall not place the *Invitation For Bid* number on the outside of any envelope containing questions since such an envelope may be identified as a sealed bid and may not be opened until after the official *Invitation For Bid* due date and time.

3. **PROSPECTIVE OFFERORS CONFERENCE:** A prospective offerors conference may be held. If scheduled, the date and time of this conference will be indicated on the cover page of this document. The purpose of this conference will be to clarify the contents of this *Invitation For Bid* in order to prevent any misunderstanding of the City's position. Any doubt as to the requirements of this *Invitation For Bid* or any apparent omission or discrepancy should be presented to the City at this conference. The City will then determine if any action is necessary and may issue a written amendment to the *Invitation For Bid*. Oral statements or instructions will not constitute an amendment to this *Invitation For Bid*.

4. **LATE BIDS:** Late Bids will not be considered, except as provided by the **City of Peoria Procurement Code**. A vendor submitting a late bid shall be so notified.

5. **WITHDRAWAL OF BID:** At any time prior to the specified bid due date and time, a Vendor (or designated representative) may withdraw the bid. Telegraphic (facsimile) or mailgram bid withdrawals will not be considered.

6. **AMENDMENT OF BID:** Receipt of a Solicitation Amendment (COP Form 207) shall be acknowledged by signing and returning the document prior to the specified bid due date and time.

7. **PAYMENT:** The City will make every effort to process payment for the purchase of goods or services within thirty (30) calendar days after receipt of goods or services and a correct notice of amount due, unless a good faith dispute exists as to any obligation to pay all or a portion of the account. Any bid that requires payment in less than thirty (30) calendar days shall not be considered.

8. **NEW:** All items shall be new, unless otherwise stated in the specifications.

9. **DISCOUNTS:** Payment discount periods will be computed from the date of receipt of material/service or correct invoice, whichever is later, to the date Buyer's payment is mailed. Unless freight and other charges are itemized, any discount provided will be taken on full amount of invoice. Payment discounts of thirty (30) calendar days or more will be deducted from the bid price in determining the low bid. However, the Buyer shall be entitled to take advantage of any payment discount offered by the Vendor provided payment is made within the discount period.

10. **TAXES:** The City of Peoria is exempt from Federal Excise Tax, including the Federal Transportation Tax. Sales tax, if any, shall be indicated as a separate item.

11. **VENDOR REGISTRATION:** After the award of a contract, the successful Vendor shall have a completed Vendor Registration Form (COP Form 200) on file with the City of Peoria Materials Management Division.

12. **AWARD OF CONTRACT:**

    a. Unless the Offeror states otherwise, or unless provided within this *Invitation For Bid*, the City reserves the right to award by individual line item, by group of line items, or as a total, whichever is deemed most advantageous to the City.

    b. Notwithstanding any other provision of this *Invitation For Bid*, The City expressly reserves the right to:

       i. Waive any immaterial defect or informality: or
       ii. Reject any or all bids, or portions thereof, or
       iii. Reissue an *Invitation For Bid*.

    c. A response to a *Invitation For Bid* is an offer to contract with the City based upon the terms, conditions and specifications contained in the City's *Invitation For Bid* and the written amendments thereto, if any. Bids do not become contracts unless and until they are accepted by the **City Council.** A contract is formed when written notice of award(s) is provided to the successful Offeror(s). The contract has its inception in the award document, eliminating a formal signing of a separate contract. For that reason, all of the terms and conditions of the procurement contract are contained in the *Invitation For Bid*; unless modified by a Solicitation Amendment (COP Form 207) or a Contract Amendment (COP Form 217).

STANDARD TERMS AND CONDITIONS

Materials Management Procurement
9875 N. 85th Ave., 2nd Fl.
Peoria, Arizona 85345-6560
Phone: (623) 773-7115
Fax: (623) 773-7118

THE FOLLOWING TERMS AND CONDITIONS ARE AN EXPLICIT PART OF THE SOLICITATION AND ANY RESULTANT CONTRACT.

1. **CERTIFICATION:** By signature in the Offer section of the Offer and Contract Award page (COP Form 203), the Vendor certifies:

   a. The submission of the offer did not involve collusion or other anti-competitive practices.
   b. The Vendor shall not discriminate against any employee or applicant for employment in violation of Federal Executive Order 11246.
   c. The Vendor has not given, offered to give, nor intends to give at any time hereafter any economic opportunity, future employment, gift, loan, gratuity, special discount, trip favor, or service to a public servant in connection with the submitted offer. Failure to sign the offer, or signing it with a false statement, shall void the submitted offer or any resulting contracts, and the vendor may be debarred.

2. **GRATUITIES:** The City may, by written notice to the Contractor, cancel this contract if it is found by the City that gratuities, in the form of entertainment, gifts or otherwise, were offered or given by the Contractor or any agent or representative of the Contractor, to any officer or employee of the City with a view toward securing an order, securing favorable treatment with respect to the awarding, amending, or the making of any determinations with respect to the performing of such order. In the event this contract is cancelled by the City pursuant to this provision, the City shall be entitled, in addition to any other rights and remedies, to recover or withhold from the Contractor the amount of the gratuity. Paying the expense of normal business meals which are generally made available to all eligible city government customers shall not be prohibited by this paragraph.

3. **APPLICABLE LAW:** In the performance of this agreement, contractors shall abide by and conform to any and all laws of the United States, State of Arizona and City of Peoria including but not limited to federal and state executive orders providing for equal employment and procurement opportunities, the Federal Occupational Safety and Health Act and any other federal or state laws applicable to this agreement.

   Contractor specifically understands and acknowledges the applicability to it of the Americans with Disabilities Act, the Immigration Reform and Control Act of 1986, and the Drug Free Workplace Act of 1989. In addition, if this agreement pertains to construction, Contractor must also comply with A.R.S. § 34-301, as amended (Employment of Aliens on Public Works Prohibited) and A.R.S. § 34-302, as amended (Residence Requirements for Employees).

   Under the provisions of A.R.S. § 41-4401, Contractor hereby warrants to the City that Contractor and each of its subcontractors ("Subcontractors") will comply with, and are contractually obligated to comply with, all Federal immigration laws and regulations that relate to their employees and A.R.S. § 23-214(A) (hereinafter, "Contractor Immigration Warranty").

   A breach of the Contractor Immigration Warranty shall constitute a material breach of this agreement and shall subject Contractor to penalties up to and including termination of this agreement at the sole discretion of the City. The City may, at its sole discretion, conduct random verification of the employment records of Contractor and any Subcontractors to ensure compliance with the Contractor Immigration Warranty. Contractor agrees to assist the City in regard to any random verifications performed.

   Neither Contractor nor any Subcontractor shall be deemed to have materially breached the Contractor Immigration Warranty if Contractor or the Subcontractor establishes that it has complied with the employment verification provisions prescribed by §§ 274A and 274B of the Federal Immigration and Nationality Act and the E-Verify requirements prescribed by A.R.S. §23-214(A).

   The provisions of this Paragraph must be included in any contract Contractor enters into with any Subcontractors who provide services under this agreement or any subcontract. "Services" is defined as furnishing labor, time or effort in the State of Arizona by a contractor or subcontractor. Services include construction or maintenance of any structure, building or transportation facility or improvement to real property.

Materials Management Procurement
9875 N. 85th Ave., 2nd Fl.
Peoria, Arizona 85345-6560
Phone: (623) 773-7115
Fax: (623) 773-7118

Contractor warrants, for the term of this agreement and for six months thereafter, that is has fully complied with the requirements of the Immigration Reform and Control Act of 1986 and all related or similar legal authorities.

This contract shall be governed by the City and Contractor shall have all remedies afforded each by the Uniform Commercial Code, as adopted in the State of Arizona, except as otherwise provided in this contract or in statutes pertaining specifically to the City. This contract shall be governed by the laws of the State of Arizona and suit pertaining to this contract may be brought only in courts in the State of Arizona.

This contract is subject to the provisions of ARS §38-511; the City may cancel this contract without penalty or further obligations by the City or any of its departments or agencies if any person significantly involved in initiating, negotiating, securing, drafting or creating the contract on behalf of the City or any of its departments or agencies, is at any time while the contract or any extension of the contract is in effect, an employee of any other party to the contract in any capacity or a consultant to any other party of the contract with respect to the subject matter of the contract.

4. **LEGAL REMEDIES:** All claims and controversies shall be subject to resolution according to the terms of the City of Peoria Procurement Code.

5. **CONTRACT:** The contract between the City and the Contractor shall consist of (1) the Solicitation, including instructions, all terms and conditions, specifications, scopes of work, attachments, and any amendments thereto, and (2) the offer submitted by the Vendor in response to the solicitation. In the event of a conflict in language between the Solicitation and the Offer, the provisions and requirements in the Solicitation shall govern. However, the City reserves the right to clarify, in writing, any contractual terms with the concurrence of the Contractor, and such written contract shall govern in case of conflict with the applicable requirements stated in the Solicitation or the Vendor's offer. The Solicitation shall govern in all other matters not affected by the written contract.

6. **CONTRACT AMENDMENTS:** This contract may be modified only by a written Contract Amendment (COP Form 217) signed by persons duly authorized to enter into contracts on behalf of the City and the Contractor.

7. **CONTRACT APPLICABILITY:** The Offeror shall substantially conform to the terms, conditions, specifications and other requirements found within the text of this specific Solicitation. All previous agreements, contracts, or other documents, which have been executed between the Offeror and the City are not applicable to this Solicitation or any resultant contract.

8. **PROVISIONS REQUIRED BY LAW:** Each and every provision of law and any clause required by law to be in the contract will be read and enforced as though it were included herein, and if through mistake or otherwise any such provision is not inserted, or is not correctly inserted, then upon the application of either party, the contract will forthwith be physically amended to make such insertion or correction.

9. **SEVERABILITY:** The provisions of this contract are severable to the extent that any provision or application held to be invalid shall not affect any other provision or application of the contract which may remain in effect without the invalid provision or application.

10. **RELATIONSHIP TO PARTIES:** It is clearly understood that each party will act in its individual capacity and not as an agent, employee, partner, joint venturer, or associate of the other. An employee or agent of one party shall not be deemed or construed to be the employee or agent of the other for any purpose whatsoever. The Contractor is advised that taxes or Social Security payments will not be withheld from any City payments issued hereunder and that the Contractor should make arrangements to directly pay such expenses, if any.

11. **INTERPRETATION-PAROL EVIDENCE:** This contract represents the entire agreement of the Parties with respect to its subject matter, and all previous agreements, whether oral or written, entered into prior to this contract are hereby revoked and superseded by this contract. No representations, warranties, inducements or oral agreements have been made by any of the Parties except as expressly set forth herein, or in any other contemporaneous written agreement executed for the purposes of carrying out the provisions of this contact. This contract may not be changed,

Materials Management Procurement
9875 N. 85th Ave., 2nd Fl.
Peoria, Arizona 85345-6560
Phone: (623) 773-7115
Fax: (623) 773-7118

modified or rescinded except as provided for herein, absent a written agreement signed by both Parties. Any attempt at oral modification of this contract shall be void and of no effect.

12. **NO DELEGATION OR ASSIGNMENT:** Contractor shall not delegate any duty under this Contract, and no right or interest in this Contract shall be assigned by Contractor to any successor entity or third party, including but not limited to an affiliated successor or purchaser of Contractor or its assets, without prior written permission of the City. The City, at its option, may cancel this Contract in the event Contractor undertakes a delegation or assignment without first obtaining the City's written approval. Contractor agrees and acknowledges that it would not be unreasonable for the City to decline to approve a delegation or assignment that results in a material change to the services provided under this Contract or an increased cost to the City.

13. **SUBCONTRACTS:** No subcontract shall be entered into by the contractor with any other party to furnish any of the material, service or construction specified herein without the advance written approval of the City. The prime contractor shall itemize all sub-contractors which shall be utilized on the project. Any substitution of sub-contractors by the prime contractor shall be approved by the City and any cost savings will be reduced from the prime contractor's bid amount. All subcontracts shall comply with Federal and State laws and regulations which are applicable to the services covered by the subcontract and shall include all the terms and conditions set forth herein which shall apply with equal force to the subcontract and if the Subcontractor were the Contractor referred to herein. The Contractor is responsible for contract performance whether or not Subcontractors are used.

14. **RIGHTS AND REMEDIES:** No provision in this document or in the vendor's offer shall be construed, expressly or by implication, as waiver by the City of any existing or future right and/or remedy available by law in the event of any claim of default or breach of contract. The failure of the City to insist upon the strict performance of any term or condition of the contract or to exercise or delay the exercise of any right or remedy provided in the contract, or by law, or the City's acceptance of and payment for materials or services, shall not release the Contractor from any responsibilities or obligations imposed by this contract or by law, and shall not be deemed a waiver of any right of the City to insist upon the strict performance of the Contract.

15. **INDEMNIFICATION:** To the fullest extent permitted by law, the Contractor shall defend, indemnify and hold harmless the City, its agents, representatives, officers, directors, officials and employees from and against all claims, damages, losses and expenses (including but not limited to attorney fees, court costs, and the cost of appellate proceedings), relating to, arising out of, or alleged to have resulted from the acts, errors, mistakes, omissions, work or services of the Contractor, its employees, agents, or any tier of subcontractors in the performance of this Contract. Contractor's duty to defend, hold harmless and indemnify the City, its agents, representatives, officers, directors, officials and employees shall arise in connection with any claim, damage, loss or expense that is attributable to bodily injury, sickness, disease, death, or injury to, impairment, or destruction of property including loss of use resulting therefrom, caused by any acts, errors, mistakes, omissions, work or services in the performance of this Contract including any employee of the Contractor or any tier of subcontractor or any other person for whose acts, errors, mistakes, omissions, work or services the Contractor may be legally liable.

    The amount and type of insurance coverage requirements set forth herein will in no way be construed as limiting the scope of the indemnity in this paragraph.

16. **OVERCHARGES BY ANTITRUST VIOLATIONS:** The City maintains that, in practice, overcharges resulting from antitrust violations are borne by the purchaser. Therefore, to the extent permitted by law, the Contractor hereby assigns to the City any and all claims for such overcharges as to the goods and services used to fulfill the Contract.

17. **FORCE MAJEURE:** Except for payment for sums due, neither party shall be liable to the other nor deemed in default under this Contract if and to the extent that such party's performance of this Contract is prevented by reason of force Majeure. The term *"force majeure"* means an occurrence that is beyond the control of the party affected and occurs without its fault or negligence. Without limiting the foregoing, force majeure includes acts of God: acts of the public enemy; war; acts of terror, hate crimes affecting public order; riots; strikes; mobilization; labor disputes; civil disorders; fire; floods; lockouts, injunctions-intervention-acts, or failures or refusals to act by government authority;

Materials Management Procurement
9875 N. 85th Ave., 2nd Fl.
Peoria, Arizona 85345-6560
Phone: (623) 773-7115
Fax: (623) 773-7118

events or obstacles resulting from a governmental authority's response to the foregoing; and other similar occurrences beyond the control of the party declaring force majeure which such party is unable to prevent by exercising reasonable diligence. The force majeure shall be deemed to commence when the party declaring force majeure notifies the other party of the existence of the force majeure and shall be deemed to continue as long as the results or effects of the force majeure prevent the party from resuming performance in accordance with this Contract.

Force majeure shall not include the following occurrences:

a. Late delivery of equipment or materials caused by congestion at a manufacturer's plant or elsewhere, an oversold condition of the market, inefficiencies, or similar occurrences.

b. Late performance by a subcontractor unless the delay arises out of a force majeure occurrence in accordance with this Force Majeure term and Condition.

Any delay or failure in performance by either party hereto shall not constitute default hereunder or give rise to any claim for damages or loss of anticipated profits if, and to the extent that such delay or failure is caused by force majeure. If either party is delayed at any time in the progress of the work by force majeure, then the delayed party shall notify the other party in writing of such delay within forty-eight (48) hours commencement thereof and shall specify the causes of such delay in such notice. Such notice shall be hand delivered or mailed *Certified-Return Receipt* and shall make a specific reference to this article, thereby invoking its provisions. The delayed party shall cause such delay to cease as soon as practicable and shall notify the other party in writing. The time of completion shall be extended by contract modification for a period of time equal to the time that the results or effects of such delay prevent the delayed party from performing in accordance with this contract.

18. **RIGHT TO ASSURANCE:** Whenever one party to this contract in good faith has reason to question the other party's intent to perform he may demand that the other party give a written assurance of this intent to perform. In the event that a demand is made and no written assurance is given within five (5) days, the demanding party may treat this failure as an anticipatory repudiation of the Contract.

19. **RIGHT TO AUDIT RECORDS:** The City may, at reasonable times and places, audit the books and records of any Contractor as related to any contract held with the City. This right to audit also empowers the City to inspect the papers of any Contractor or Subcontractor employee who works on this contract to ensure that the Contractor or Subcontractor is complying with the Contractor Immigration Warranty made pursuant to Paragraph 3 above.

20. **RIGHT TO INSPECT PLANT:** The City may, at reasonable times, inspect the part of the plant or place of business of a Contractor or Subcontractor which is related to the performance of any contract as awarded or to be awarded.

21. **WARRANTIES:** Contractor warrants that all material, service or construction delivered under this contract shall conform to the specifications of this contract. Unless otherwise stated in Contractor's response, the City is responsible for selecting items, their use, and the results obtained from any other items used with the items furnished under this contract. Mere receipt of shipment of the material/service specified and any inspection incidental thereto by the City shall not alter or affect the obligations of the Contractor or the rights of the City under the foregoing warranties. Additional warranty requirements may be set forth in the solicitation.

22. **INSPECTION:** All material and/or services are subject to final inspection and acceptance by the City. Materials and/or services failing to conform to the specifications of this Contract will be held at Contractor's risk and may be returned to the Contractor. If so returned, all costs are the responsibility of the Contractor. The City may elect to do any or all:

    a. Waive the non-conformance.
    b. Stop the work immediately.
    c. Bring material into compliance.

    This shall be accomplished by a written determination for the City.

Materials Management Procurement
9875 N. 85th Ave., 2nd Fl.
Peoria, Arizona 85345-6560
Phone: (623) 773-7115
Fax: (623) 773-7118

23. **TITLE AND RISK OF LOSS:** The title and risk of loss of material and/or service shall not pass to the City until the City actually receives the material or service at the point of delivery, unless otherwise provided within this Contract.

24. **NO REPLACEMENT OF DEFECTIVE TENDER:** Every tender of materials shall fully comply with all provisions of the Contract. If a tender is made which does not fully conform, this shall constitute a breach of the Contract as a whole.

25. **DEFAULT IN ONE INSTALLMENT TO CONSTITUTE TOTAL BREACH:** Contractor shall deliver conforming materials in each installment of lot of this Contract and may not substitute nonconforming materials. Delivery of nonconforming materials or a default of any nature, at the option of the City, shall constitute a breach of the Contract as a whole.

26. **SHIPMENT UNDER RESERVATION PROHIBITED:** Contractor is not authorized to ship materials under reservation and no tender of a bill of lading will operate as a tender of the materials.

27. **LIENS:** All materials, service or construction shall be free of all liens, and if the City requests, a formal release of all liens shall be delivered to the City.

28. **LICENSES:** Contractor shall maintain in current status all Federal, State and Local licenses and permits required for the operation of the business conducted by the Contractor as applicable to this Contract.

29. **PATENTS AND COPYRIGHTS:** All services, information, computer program elements, reports and other deliverables, which may be patented or copyrighted and created under this contract are the property of the City and shall not be used or released by the Contractor or any other person except with the prior written permission of the City.

30. **PREPARATION OF SPECIFICATIONS BY PERSONS OTHER THAN CITY PERSONNEL:** All specifications shall seek to promote overall economy for the purposes intended and encourage competition and not be unduly restrictive in satisfying the City's needs. No person preparing specifications shall receive any direct or indirect benefit from the utilization of specifications, other than fees paid for the preparation of specifications.

31. **COST OF BID/PROPOSAL PREPARATION:** The City shall not reimburse the cost of developing presenting or providing any response to this solicitation. Offers submitted for consideration should be prepared simply and economically, providing adequate information in a straightforward and concise manner.

32. **PUBLIC RECORD:** All offers submitted in response to this solicitation shall become the property of the City and shall become a matter of public record available for review, subsequent to the award notification, in accordance with the City's Procurement Code. However, subsequent to the award of the contract, any information and documents obtained by the City during the course of an audit conducted in accordance with Paragraph 19 above for the purpose of determining compliance by Contractor or a Subcontractor with the Contractor Immigration Warranty mandated by Paragraph 3 above shall remain confidential and shall not be made available for public review or produced in response to a public records request, unless the City is ordered or otherwise directed to do so by a court of competent jurisdiction.

33. **ADVERTISING:** Contractor shall not advertise or publish information concerning this Contract, without prior written consent of the City.

34. **DELIVERY ORDERS:** The City shall issue a Purchase Order for the material and/or services covered by this contract. All such documents shall reference the contract number as indicated on the Offer and Contract Award (COP Form 203).

35. **FUNDING:** Any contract entered into by the City of Peoria is subject to funding availability. Fiscal years for the City of Peoria are July 1 to June 30. The City Council approves all budget requests. If a specific funding request is not approved, the contract shall be terminated.

36. **DISCLAIMER:** The City of Peoria, Arizona provides current and complete solicitation information for registered Plan Holders only. Updates, amendments and related information regarding the solicitation contained herein will be

Materials Management Procurement
9875 N. 85th Ave., 2nd Fl.
Peoria, Arizona 85345-6560
Phone: (623) 773-7115
Fax: (623) 773-7118

delivered only to registered Plan Holders. The City assumes no liability or duty to so update or send any update to persons who are not Plan Holders. Any person who acquires these documents from any source other than the City website or directly from the Materials Management Division, has no assurance that the solicitation is valid. No person may amend this document, nor may any person publish it without this disclaimer.

37. **PAYMENT:** A separate invoice shall be issued for each shipment of material or service performed, and no payment will be issued prior to receipt of material and/or services and correct invoice.

38. **PROHIBITED LOBBYING ACTIVITIES:** The Offeror, his/her agent or representative shall not contact, orally or in any written form any City elected official or any City employee other than the Materials Management Division, the procuring department, City Manager, Deputy City Manager or City Attorney's office (for legal issues only) regarding the contents of this solicitation or the solicitation process commencing from receipt of a copy of this Invitation for Bids and ending upon submission of a staff report for placement on a City Council agenda. The Materials Manager shall disqualify an Offeror's proposal for violation of this provision. This provision shall not prohibit an Offeror from petitioning an elected official after submission of a staff report for placement on a City Council agenda or engaging in any other protected first amendment activity after submission of a staff report for placement on a City Council agenda.

39. **PROHIBITED POLITICAL CONTRIBUTIONS:** Contractor during the term of this Agreement shall not make a contribution reportable under Title 16, Chapter 6, Article 1, Arizona Revised Statutes to a candidate or candidate committee for any city elective office during the term of this Agreement. The City reserves the right to terminate the Agreement without penalty for any violation of this provision.

SPECIAL TERMS AND CONDITIONS

Solicitation Number: **P16-0065**

Materials Management Procurement
9875 N. 85th Ave., 2nd Fl.
Peoria, Arizona 85345-6560
Phone: (623) 773-7115
Fax: (623) 773-7118

1. **Purpose:** Pursuant to provisions of the City Procurement Code, the City of Peoria, Materials Management Division intends to establish a contract for **Street Signs and Hardware**.

2. **Authority:** This Solicitation as well as any resultant contract is issued under the authority of the City Materials Manager. No alteration of any resultant contract may be made without the express written approval of the City Materials Manager in the form of an official contract amendment. Any attempt to alter any contract without such approval is a violation of the contract and the City Procurement Code. Any such action is subject to the legal and contractual remedies available to the City inclusive of, but not limited to, contract cancellation, suspension and/or debarment of the contractor.

3. **Offer Acceptance Period:** In order to allow for an adequate evaluation, the City requires an offer in response to this Solicitation to be valid and irrevocable for ninety (90) days after the opening time and date.

4. **Eligible Agencies:** Any contract resulting from this Solicitation shall be for the use of all City of Peoria departments, agencies and boards.

5. **Cooperative Purchasing:** While this contract is for the City of Peoria, other public agencies and political subdivisions may express interest in utilizing the contract. In addition to the City of Peoria,.and with approval of the contractor, this contract may be extended for use by other eligible public agencies (i.e. municipalities, school districts, nonprofit educational institutions, public health institutions, community facilities districts, and government agencies of the State). Eligible public agencies may elect to utilize the contract through cooperative purchasing (or piggybacking) on the contract and do so at their discretion. No volume is implied or guaranteed, and the contractor must be in agreement with the cooperative transaction. The Strategic Alliance for Volume Expenditures (SAVE), a group of school districts and other public agencies, have signed an intergovernmental cooperative purchase agreement to obtain economies of scale. As a member of SAVE, the City of Peoria will act as the lead agency. Any such usage by other participating public agencies must be in accordance with the ordinance, charter and/or procurement rules and regulations of the respective public agency. Potential participating public agencies (i.e. municipalities, school districts, nonprofit educational institutions, public health institutions, community facilities districts, and government agencies of the State) recognize potential equipment, logistical and capacity limitations by the contractor may limit the contractor's ability to extend use of this contract. Any orders placed to the contractor will be placed by the specific public agency participating in this purchase, and payment for purchases made under this agreement will be the sole responsibility of each participating public agency. The City of Peoria shall not be responsible for any disputes arising out of transactions made by others.

6. **Contract Type:** Fixed Price Term Indefinite Quantity

7. **Term of Contract:** The term of any resultant contract shall commence on the date of award and shall continue for a period of one (1) year thereafter, unless terminated, cancelled or extended as otherwise provided herein.

8. **Contract Extension:** By mutual written contract amendment, any resultant contract may be extended for supplemental periods of up to a maximum of forty-eight (48) months.

9. **Affirmative Action:** It is the policy of the City of Peoria that suppliers of goods or services to the City adhere to a policy of equal employment opportunity and demonstrate an affirmative effort to recruit, hire, and promote regardless of race, color, religion, gender, national origin, age or disability. The City of Peoria encourages diverse suppliers to respond to solicitations for products or services.

10. **Shipping Terms:** Prices shall be *F.O.B. Destination* to any location in the City of Peoria, delivered to the specified receiving point as required by the customer agency at the time of order. Contractor shall retain title and control of all goods until they are delivered and the contract of coverage has been completed. All risk of transportation and all related charges shall be the responsibility of the contractor. All claims for visible or concealed damage shall be filed by the contractor. The City will notify the contractor promptly of any damaged goods and shall assist the contractor in arranging for inspection.

11. **Delivery:** Delivery shall be made within ten (10) days of receipt of a purchase order.

12. **Non-Exclusive Contract:** Any contract resulting from this Solicitation shall be awarded with the understanding and agreement that it is for the sole convenience of the City of Peoria. The City reserves the right to obtain like goods or services from another source when necessary. Off-Contract Purchase Authorization may only be approved by the City

Materials Management Procurement
9875 N. 85th Ave., 2nd Fl.
Peoria, Arizona 85345-6560
Phone: (623) 773-7115
Fax: (623) 773-7118

Materials Manager. Approval shall be at the discretion of the City Materials Manager and shall be conclusive, however, approval shall be granted only after a proper review and when deemed to be appropriate. Off-contract procurement shall be consistent with the City Procurement Code.

13. **Taxes:** Prices offered shall include all applicable State and local taxes. The City will pay all applicable taxes. Taxes must be listed as a separate item on the price sheet attached to this Solicitation and on all invoices.

14. **Warranty:** Each offer shall include a complete and exclusive statement of the product warranty.

15. **Price Adjustment:** The City of Peoria Purchasing Office will review fully documented requests for price increases after any contract has been in effect for one (1) year. Any price increase adjustment will only be made at the time of contract extension and will be a factor in the extension review process. The City of Peoria Materials Management Division will determine whether the requested price increase or an alternate option, is in the best interest of the City. Any price adjustment will be effective upon the effective date of the contract extension.

16. **Price Reduction:** A price reduction adjustment may be offered at any time during the term of a contract and shall become effective upon notice.

17. **Discussions:** In accordance with the City of Peoria Procurement Code, after the initial receipt of proposals, discussions may be conducted with offerors who submit proposals determined to be reasonably susceptible of being selected for award.

18. **Insurance Requirements:** The Contractor, at Contractor's own expense, shall purchase and maintain the herein stipulated minimum insurance with companies duly licensed, possessing a current A.M. Best, Inc. Rating of A-, or approved unlicensed in the State of Arizona with policies and forms satisfactory to the City.

    All insurance required herein shall be maintained in full force and effect until all work or service required to be performed under the terms of the Contract is satisfactorily completed and formally accepted; failure to do so may, at the sole discretion of the City, constitute a material breach of this Contract.

    The Contractor's insurance shall be primary insurance as respects the City, and any insurance or self-insurance maintained by the City shall not contribute to it.

    Any failure to comply with the claim reporting provisions of the insurance policies or any breach of an insurance policy warranty shall not affect coverage afforded under the insurance policies to protect the City.

    The insurance policies, except Workers' Compensation, shall contain a waiver of transfer rights of recovery (subrogation) against the City, its agents, representatives, directors, officers, and employees for any claims arising out of the Contractor's acts, errors, mistakes, omissions, work or service.

    The insurance policies may provide coverage which contain deductibles or self-insured retentions. Such deductible and/or self-insured retentions shall not be applicable with respect to the coverage provided to the City under such policies. The Contractor shall be solely responsible for the deductible and/or self-insured retention and the City, at its option, may require the Contractor to secure payment of such deductibles or self-insured retentions by a Surety Bond or an irrevocable and unconditional letter of credit.

    The City reserves the right to request and to receive, within 10 working days, certified copies of any or all of the herein required insurance policies and endorsements. The City shall not be obligated, however, to review same or to advise Contractor of any deficiencies in such policies and endorsements, and such receipt shall not relieve Contractor from, or be deemed a waiver of the City's right to insist on, strict fulfillment of Contractor's obligations under this Contract.

    The insurance policies, except Workers' Compensation and Professional Liability, required by this Contract, shall name the City, its agents, representatives, officers, directors, officials and employees as Additional Insureds.

19. **Required Insurance Coverage**:

    a. Commercial General Liability

Materials Management Procurement
9875 N. 85th Ave., 2nd Fl.
Peoria, Arizona 85345-6560
Phone: (623) 773-7115
Fax: (623) 773-7118

Contractor shall maintain Commercial General Liability insurance with a limit of not less than $1,000,000 for each occurrence with a $2,000,000 Products/Completed Operations Aggregate and a $2,000,000 General Aggregate Limit. The policy shall include coverage for bodily injury, broad form property damage, personal injury, products and completed operations and blanket contractual coverage including, but not limited to, the liability assumed under the indemnification provisions of this Contract which coverage will be at least as broad as Insurance Service Office, Inc. Policy Form CG 00011207 or any replacements thereof. The coverage shall not exclude X, C, U.

Such policy shall contain a severability of interest provision, and shall not contain a sunset provision or commutation clause, nor any provision which would serve to limit third party action over claims.

The Commercial General Liability additional insured endorsement shall be at least as broad as the Insurance Service Office, Inc.'s Additional Insured, Form B, CG 20370704, and shall include coverage for Contractor's operations and products and completed operations.

If required by this Contract the Contractor subletting any part of the work, services or operations awarded to the Contractor shall purchase and maintain, at all times during prosecution of the work, services or operations under this Contract, an Owner's and Contractor's Protective Liability insurance policy for bodily injury and property damage, including death, which may arise in the prosecution of the Contractor's work, service or operations under this Contract. Coverage shall be on an occurrence basis with a limit not less than $1,000,000 per occurrence, and the policy shall be issued by the same insurance company that issues the Contractor's Commercial General Liability insurance.

b. Automobile Liability

Contractor shall maintain Commercial/Business Automobile Liability insurance with a combined single limit for bodily injury and property damage of not less than $1,000,000 each occurrence with respect to the Contractor's any owned, hired, and non-owned vehicles assigned to or used in performance of the Contractor's work. Coverage will be at least as broad as coverage code 1, "any auto", (Insurance Service Office, Inc. Policy Form CA 00010306, or any replacements thereof). Such insurance shall include coverage for loading and off loading hazards. If hazardous substances, materials or wastes are to be transported, MCS 90 endorsement shall be included and $5,000,000 per accident limits for bodily injury and property damage shall apply.

c. Workers' Compensation

The Contractor shall carry Workers' Compensation insurance to cover obligations imposed by federal and state statutes having jurisdiction of Contractor's employees engaged in the performance of the work or services; and, Employer's Liability insurance of not less than $100,000 for each accident, $100,000 disease for each employee, and $500,000 disease policy limit.

In case any work is subcontracted, the Contractor will require the Subcontractor to provide Workers' Compensation and Employer's Liability to at least the same extent as required of the Contractor.

20. **Certificates of Insurance:** Prior to commencing work or services under this Contract, Contractor shall furnish the City with Certificates of Insurance, and formal endorsements as required by the Contract, issued by Contractor's insurer(s), as evidence that policies providing the required coverages, conditions and limits required by this Contract are in full force and effect.

In the event any insurance policy(ies) required by this contract is(are) written on a "claims made" basis, coverage shall extend for two years past completion and acceptance of the Contractor's work or services and as evidenced by annual Certificates of Insurance.

If a policy does expire during the life of the Contract, a renewal certificate must be sent to the City fifteen (15) days prior to the expiration date.

All Certificates of Insurance shall be identified with bid serial number and title. A $25.00 administrative fee will be assessed for all certificates received without the appropriate bid serial number and title.

21. **Cancellation and Expiration Notice:** Insurance required herein shall not expire, be canceled, or materially changed without thirty (30) days prior written notice to the City.

Materials Management Procurement
9875 N. 85th Ave., 2nd Fl.
Peoria, Arizona 85345-6560
Phone: (623) 773-7115
Fax: (623) 773-7118

22. **Evaluation:** In accordance with the City of Peoria Procurement Code, awards shall be made to the lowest responsible and responsive bidder whose bid conforms in all material respects to the Invitation For Bid.

23. **Independent Contractor:**

    a. General

        i. The Contractor acknowledges that all services provided under this Agreement are being provided by him as an independent contractor, not as an employee or agent of the City Manager or the City of Peoria.

        ii. Both parties agree that this Agreement is nonexclusive and that Contractor is not prohibited from entering into other contracts nor prohibited from practicing his profession elsewhere.

    b. Liability

        i. The City of Peoria shall not be liable for any acts of Contractor outside the scope of authority granted under this Agreement or as the result of Contractor's acts, errors, misconduct, negligence, omissions and intentional acts.

        ii. To the fullest extent permitted by law, the Contractor shall defend, indemnify and hold harmless the City, its agents, representatives, officers, directors, officials and employees from and against all claims, damages, losses and expenses (including but not limited to attorney fees, court costs, and the cost of appellate proceedings), relating to, arising out of, or alleged to have resulted from the acts, errors, mistakes, omissions, work or services of the Contractor, its employees, agents, or any tier of subcontractors in the performance of this Contract. Contractor's duty to defend, hold harmless and indemnify the City, its agents, representatives, officers, directors, officials and employees shall arise in connection with any claim, damage, loss or expense that is attributable to bodily injury, sickness, disease, death, or injury to, impairment, or destruction of property including loss of use resulting therefrom, caused by any acts, errors, mistakes, omissions, work or services in the performance of this Contract including any employee of the Contractor or any tier of subcontractor or any other person for whose acts, errors, mistakes, omissions, work or services the Contractor may be legally liable.

        The amount and type of insurance coverage requirements set forth herein will in no way be construed as limiting the scope of the indemnity in this paragraph.

    c. Other Benefits

        The Contractor is an independent contractor, therefore, the City Manager will not provide the Contractor with health insurance, life insurance, workmen's compensation, sick leave, vacation leave, or any other fringe benefits. Further, Contractor acknowledges that he is exempt from coverage of the Comprehensive Benefit and Retirement Act (COBRA). Any such fringe benefits shall be the sole responsibility of Contractor.

24. **Estimated Quantities:** This solicitation references quantities as a general indication of the needs of the City. The City anticipates considerable activity resulting from contracts that will be awarded as a result of this solicitation; however, the quantities shown are estimates only and the City reserves the right to increase or decrease any quantities actually acquired.

    No commitment of any kind is made concerning quantities and that fact should be taken into consideration by each potential contractor.

25. **Ordering Process:** Upon award of a contract by the City of Peoria, Materials Management Division may procure the specific material and/or service awarded by the issuance of a purchase order to the appropriate contractor. The award of a contract shall be in accordance with the City of Peoria Procurement Code and all transactions and procedures required by the Code for public bidding have been complied with. A purchase order for the awarded material and/or service that cites the correct contract number is the only document required for the department to order and the contractor to delivery the material and/or service.

    Any attempt to represent any material and/or service not specifically awarded as being under contract with the City of Peoria is a violation of the contract and the City of Peoria Procurement Code. Any such action is subject to the legal and contractual remedies available to the City inclusive of, but not limited to, contract cancellation, suspension and/or debarment of the contractor.

Materials Management Procurement
9875 N. 85th Ave., 2nd Fl.
Peoria, Arizona 85345-6560
Phone: (623) 773-7115
Fax: (623) 773-7118

26. **Invoices:** The Contractor shall submit invoices to the City of Peoria Accounts Payable Department, 8401 W. Monroe St, Peoria AZ 85345. Invoices may also be submitted electronically to accountspayable@peoriaaz.gov.

27. **Billing:** All billing notices to the City shall identify the specific item(s) being billed and the purchase order number. Items are to be identified by the name, model number, and/or serial number most applicable. Any purchase/delivery order issued by the requesting agency shall refer to the contract number resulting from this solicitation.

28. **Current Products:** All products offered in response to this solicitation shall be new and in current and ongoing production shall have been formally announced for general marketing purposes; shall be a model or type currently functioning in a user (paying customer) environment and capable of meeting or exceeding all specifications and requirements set forth in this solicitation.

29. **Product Discontinuance:** The City may award contracts for particular products and/or models of equipment as a result of this solicitation. In the event that a product or model is discontinued by the manufacturer, the City at its sole discretion may allow the contractor to provide a substitute for the discontinued item. The contractor shall request permission to substitute a new product or model and provide the following:

    a. A formal announcement from the manufacturer that the product or model has been discontinued.

    b. Documentation from the manufacturer that names the replacement product or model.

    c. Documentation that provides clear and convincing evidence that the replacement meets or exceeds all specifications required by the original solicitation.

    d. Documentation that provides clear and convincing evidence that the replacement will be compatible with all the functions or uses of the discontinued product or model.

    e. Documentation confirming that the price for the replacement is the same as or less than the discontinued product or model.

30. **Inventory:** The City of Peoria has an ongoing requirement for the material indicated in this solicitation. It is an express condition of any award that a contractor shall maintain a reasonable stock on hand for delivery to the requesting agency. Failure to maintain such a stock may result in cancellation.

31. **Licenses:** Contractor shall maintain in current status all Federal, State and Local licenses and permits required for the operation of the business conducted by the Contractor.

32. **City of Peoria Business License:** Peoria City Code requires that all persons conducting business in the City of Peoria must first obtain a license. This includes businesses within the Peoria city limits, or those outside the limits who conduct business or perform services within Peoria. For business license questions or to obtain a license, please contact the City of Peoria Sales Tax & License Division at (623) 773-7160 or via email at salestax@peoriaAZ.gov.

33. **Safety Standards:** All items supplied on this contract shall comply with the current applicable Occupational Safety and Health Standards of the State of Arizona Industrial Commission, the National Electric Code, and the National Fire Protection Association Standards.

34. **Confidential Information:**

    a. If a person believes that a bid, proposal, offer, specification, or protest contains information that should be withheld, a statement advising the Materials Supervisor of this fact shall accompany the submission and the information shall be identified.

    b. The information identified by the person as confidential shall not be disclosed until the Materials Supervisor makes a written determination.

    c. The Materials Supervisor shall review the statement and information and shall determine in writing whether the information shall be withheld.

d. If the Materials Supervisor determines to disclose the information, the Materials Supervisor shall inform the bidder in writing of such determination.

35. **Confidentiality of Records:** The contractor shall establish and maintain procedures and controls that are acceptable to the City for the purpose of assuring that information contained in its records or obtained from the City or from others in carrying out its functions under the contract shall not be used or disclosed by it, its agents, officers, or employees, except as required to efficiently perform duties under the contract. Persons requesting such information should be referred to the City. Contractor also agrees that any information pertaining to individual persons shall not be divulged other than to employees or officers of contractor as needed for the performance of duties under the contract.

36. **Identity Theft Prevention:** The Contractor shall establish and maintain Identity Theft policies, procedures and controls for the purpose of assuring that "personal identifying information," as defined by A.R.S. § 13-2001(10), as amended, contained in its records or obtained from the City or from others in carrying out its responsibilities under the Contract, is protected at all times and shall not be used by or disclosed to unauthorized persons. Persons requesting such information should be referred to the City. Contractor also agrees that any "personal identifying information" shall not be disclosed other than to employees or officers of Contractor as needed for the performance of duties under the Contract. Contractor agrees to maintain reasonable policies and procedures designed to detect, prevent and mitigate the risk of identity theft. Contractor is required under this contract to review the City of Peoria's Identity Theft Program and to report to the Program Administrator any Red Flags as defined within that program. At a minimum, the contractor will have the following Identity Theft procedures in place:

    a. Solicit and retain only the "personal identifying information" minimally necessary for business purposes related to performance of the Contract.

    b. Ensure that any website used in the performance of the contract is secure. If a website that is not secure is to be used, the City shall be notified in advance before any information is posted. The City reserves to right to restrict the use of any non-secure websites under this contract.

    c. Ensure complete and secure destruction of any and all paper documents and computer files at the end of the contracts retention requirements.

    d. Ensure that office computers are password protected and that computer screens lock after a set period of time.

    e. Ensure that offices and workspaces containing customer information are secure.

    f. Ensure that computer virus protection is up to date.

37. **Multiple Awards:** In order to assure that any ensuing contracts will allow the City to fulfill current and future requirements, the City reserves the right to award contracts to multiple companies. The actual utilization of any contract will be at the sole discretion of the City. The fact that the City may make multiple awards should be taken into consideration by each potential contractor.

38. **Contract Termination:** Any contract entered into as a result of this Solicitation is for the convenience of the City and as such, may be terminated without default by the City by providing a written thirty (30) day notice of termination.

39. **Cancellation:** The City reserves the right to cancel the whole or any part of this contract due to failure by the contractor to carry out any obligation, term or condition of the contract. The City will issue written notice to the contractor for acting or failing to act as in any of the following:

    a. The contractor provides material that does not meet the specifications of the contract;

    b. The contractor fails to adequately perform the services set forth in the specifications of the contract;

    c. The contractor fails to complete the work required or to furnish the materials required within the time stipulated in the contract;

    d. The contractor fails to make progress in the performance of the contract and/or gives the City reason to believe that the contractor will not or cannot perform to the requirements of the contract.

Materials Management Procurement
9875 N. 85th Ave., 2nd Fl.
Peoria, Arizona 85345-6560
Phone: (623) 773-7115
Fax: (623) 773-7118

Upon receipt of the written notice of concern, the contractor shall have ten (10) days to provide a satisfactory response to the City. Failure on the part of the contractor to adequately address all issues of concern may result in the City resorting to any single or combination of the following remedies:

a. Cancel any contract;

b. Reserve all rights or claims to damage for breach of any covenants of the contract;

c. Perform any test or analysis on materials for compliance with the specifications of the contract. If the results of any test or analysis find a material non-compliant with the specifications, the actual expense of testing shall be borne by the contractor;

d. In case of default, the City reserves the right to purchase materials, or to complete the required work in accordance with the City Procurement Code. The City may recover any actual excess costs from the contractor by:

   i. Deduction from an unpaid balance;

   ii. Collection against the bid and/or performance bond, or;

   iii. Any combination of the above or any other remedies as provided by law.

40. **Contract Default:** The City, by written notice of default to the contractor, may terminate the whole or any part of this contract in any one of the following circumstances:

a. If the contractor fails to make delivery of the supplies or to perform the services within the time specified; or

b. If the contractor fails to perform any of the other provisions of this contract; and fails to remedy the situation within a period of ten (10) days after receipt of notice.

In the event the City terminates this contract in whole or part, the City may procure supplies or services similar to those terminated, and the contractor shall be liable to the City for any excess costs for such similar supplies or services.

41. **Protest Policy and Procedures:** The City of Peoria protest policy and procedures are available for review at the following public websites and as per ARS 34-603.C.2(f).

a. The City of Peoria Protest Policy and Procedures are available online at http://www.peoriaaz.gov/newsecondary.aspx?id=2071.

The policy is contained within the City of Peoria Procurement Code, Chapter 2- Administration, section 2-321. Procurement Code Protests; Informal and Formal.

b. The specific protest procedures are contained in the Materials Management "Procurement Administrative Guidelines" and can be accessed at http://www.peoriaaz.gov/NewSecondary.aspx?id=54937 in the "Downloads" box on the right side of the web page.

Materials Management Procurement
9875 N. 85th Ave., 2nd Fl.
Peoria, Arizona 85345-6560
Phone: (623) 773-7115
Fax: (623) 773-7118

I. INTENT

The City of Peoria has a requirement for street signs and hardware. It is the City's intent to contract for these items.

The signs and hardware specified are to be stocked by the City's Inventory Control Division to meet the needs of the Streets Department. The specific items required are listed on the Price Sheet portion of the solicitation.

II. TECHNICAL SPECIFICATIONS

A. ALUMINUM TRAFFIC SIGNS

Each sign shall be degreased, etched, alodine coated in accordance with MIL-C-5541B, packaged for protection from dust and moisture, with the sign blanks ready for application of either paint or reflective sheeting. Each sign shall be made of 5052-H38 or better Alloy, governed by A.S.T.M. specification B-209-73 or latest revisions. Each sign shall be furnished with standard 3/8 inch hole locations and corner radii, unless otherwise noted, as shown on diagram 1- 8.

Traffic signs shall be of .080 (unless otherwise noted) anodized new aluminum with rounded corners, in accordance with the "Manual on Uniform Traffic Control Devices" latest edition, as prepared by the Federal Highway Administration.

B. REFLECTIVE SHEETING

Reflective Sheeting used in the fabrication of traffic control signs shall meet the requirements of the FHWA specifications FP-96 and ASTM (D 4956) modified as noted hereinafter. All finished signs shall have matched component systems. Sheeting will be classified by type in accordance with Federal Standard Specifications FP-96 and ASTM (D4956) and the following:

1. TYPE IV SHEETING

Type IV is a high-intensity prismatic retro-reflective sheeting that shall meet or exceed 3M Scotchlite™ High Intensity Grade 3930 Series with 800 Series Process Inks. The sheeting shall be pressure sensitive adhesive.

2. TYPE XI SHEETING

Type XI is a super-high-intensity retro-reflective sheeting having highest retro-reflective characteristics at long, medium and short road distance as determined by the RA values at 0.2 degrees, 0.5 degrees, and 1.0 observation angle. This material is a non-metallized micro prismatic retro-reflective element material that shall meet or exceed 3M DG3 diamond grade material.

III. ESTIMATED QUANTITIES

This solicitation references quantities as a general indication of the needs of the City. The City anticipates considerable activity resulting from contracts that will be awarded as a result of this solicitation; however, the quantities shown are estimates only and the City reserves the right to increase or decrease any quantities actually acquired.

Materials Management Procurement
9875 N. 85th Ave., 2nd Fl.
Peoria, Arizona 85345-6560
Phone: (623) 773-7115
Fax: (623) 773-7118

Where a quantity of one (1) is shown the annual usage quantity is unknown.

No commitment of any kind is made concerning quantities and that fact should be taken into consideration by each potential contractor.

IV. PRICING

A. Listed Items: Bidders shall provide individual pricing, manufacturer name and product number for each item listed on the Price Sheet portion of this solicitation, submitting one price for each item. Bidders shall subtotal requested items.

B. In addition to prices bid for the items identified on the Price Sheet, the bidder shall also provide a statement of applicable discount percentages off catalog/price list for all other signs and hardware not listed on Price Sheet. The percentage discount offered on the Price Sheet shall also reflect the same percentage discount off on catalog/price list items. Updates on referenced catalog/price lists for discount percentages offered on non-specified items shall be provided at no cost to the City.

C. The City's intent is to order signs in multiples of ten (10) where practicable.

D. All prices shall include shipping.

V. DELIVERY

Delivery shall be made within ten (10) days of receipt of a purchase order.

VI. Brand Names

Any manufacturer's names, trade names, brand names or catalog numbers used in the specifications are for the purpose of describing and establishing the quality level, design and performance desired. Such references are not intended to limit or restrict bidding by other vendors but are intended to establish the quality, design or performance which is desired. Any offer which proposes like quality, design or performance will be considered.

Any offer which includes an "equal" item must include the specifications for that item.

PRICE SHEET

Solicitation Number: **P16-0065**

Materials Management Procurement
9875 N. 85th Ave., 2nd Fl.
Peoria, Arizona 85345-6560
Phone: (623) 773-7115
Fax: (623) 773-7118

Company Name:

Item	Description of material and/or services	Quantity	Unit	Unit Price	Extended Price
	Note: *The numbers shown for each sign represent the City of Peoria inventory numbers, and should not be mistaken for manufacturer numbers.*				
1.	#960 Sign, Blank 24"x6" Part #: 0802406 Manufacturer: DHS **See Page 28 Diagram 2**	40	EA	$2.60	$104.00
2.	#964 Sign, Blank 48"x6" Part #: 0804806 Manufacturer: DHS **See Page 28 Diagram 2**	1	EA	$5.20	$5.20
3.	#965 Sign, Blank 12"x12" Part #: 0801212 Manufacturer: DHS **See Page 28 Diagram 2**	1	EA.	$2.60	$2.60
4.	#966 Sign, Blank 18"x12" Part #: 0801812 Manufacturer: DHS **See Page 27 Diagram 1**	200	EA	$3.90	$780.00
5.	968 Sign, Blank 36"x12" Part #: 0803612 Manufacturer: DHS **See Page 27 Diagram 1**	110	EA	$7.80	$858.00
6.	#970 Sign, Blank 18"x18" Part #: 0801818 Manufacturer: DHS **See Page 27 Diagram 1**	20	EA	$5.85	$117.00
7.	#971 Sign, Blank 24"x18" Part #: 0802418 Manufacturer: DHS **See Page 27 Diagram 1**	150	EA	$7.80	$1170.00
8.	#973 Sign, Blank 24"x24" Part #: 0802424 Manufacturer: DHS **See Page 27 Diagram 1**	23	EA	$10.40	$239.20
9.	#975 Sign, Blank 36"x24" Part #: 0803624 Manufacturer: DHS **See Page 27 Diagram 1**	30	EA	$15.60	$468.00

PRICE SHEET

Solicitation Number: **P16-0065**

Materials Management Procurement
9875 N. 85th Ave., 2nd Fl.
Peoria, Arizona 85345-6560
Phone: (623) 773-7115
Fax: (623) 773-7118

Company Name:

Item	Description of material and/or services	Quantity	Unit	Unit Price	Extended Price
10.	#976 Sign, Blank 48"x24" Part #: 0804824 Manufacturer: DHS **See Page 27 Diagram 1**	10	EA	$20.80	$208.00
11.	#977 Sign, Blank 30"x30" Part #: 0803030 Manufacturer: DHS **See Page 29 Diagram 3**	120	EA	$16.25	$1950.00
12.	#979 Sign, Blank Bare 36"x36" Part #: 0803636 Manufacturer: DHS **See Page 29 Diagram 3**	13	EA	$23.40	$304.20
13.	#981 Sign, 24"x6" Dbl Face Part #: 0802406 3930 Manufacturer: DHS **See Page 28 Diagram 2**	40	EA	$6.65	$266.00
14.	#982 Sign, 30"x6" Dbl Face Part #: 0803006 3930 Manufacturer: DHS **See Page 28 Diagram 2**	20	EA	$8.30	$166.00
15.	#983 Sign, 36"x6" Dbl Face High Intensity White Part #: 0803606 3930 Manufacturer: DHS **See Page 28 Diagram 2**	1	EA	$9.95	$9.95
16.	#984 Sign, 42"x6" Dbl Face High Intensity White Part #: 0804206 3930 Manufacturer: DHS **See Page 28Diagram 2**	1	EA	$11.65	$11.65
17.	#985 Sign, 48"x6" Dbl Face High Intensity White Part #: 0804806 3930 Manufacturer: DHS **See Page 28 Diagram 2**	10	EA	$13.30	$133.00
18.	#988 Sign, 18"x18" OM4-2 Type IV Hi Intensity w/ Graffiti FilmPart #: OM4-2080393 01160 Manufacturer: DHS **See Page 29 Diagram 3**	10	EA	$14.95	$149.50
19.	#991 Sign, Blank 30"x24" requires Type IV Sheeting Part #: 0803024 3930 Manufacturer: DHS **See Page 27 Diagram 1**	280	EA	$22.90	$6412.00

PRICE SHEET

Solicitation Number: **P16-0065**

Materials Management Procurement
9875 N. 85th Ave., 2nd Fl.
Peoria, Arizona 85345-6560
Phone: (623) 773-7115
Fax: (623) 773-7118

Company Name:

Item	Description of material and/or services	Quantity	Unit	Unit Price	Extended Price
20.	#2064 Sign, Blank, Bare 48"x 30" Part #: 0804830 Manufacturer: DHS **See Page 27 Diagram 1**	1	EA	$26.00	$26.00
21.	#2480 Sign, Blank 48"x 36" No Holes Part #: 0804836 Manufacturer: DHS **See Page 27 Diagram 1**	1	EA	$31.20	$31.20
22.	#2515 24"x9" Sign Dbl Faced Type IV Part #: 08024093930 Manufacturer: DHS **See Page 28 Diagram 2**	20	EA	$9.90	$198.00
23.	#2516 30"x9" Sign Dbl Faced Type IV Part #: 08030093930 Manufacturer: DHS **See Page 28 Diagram 2**	1	EA	$12.50	$12.50
24.	#2517 36"x9" Sign Dbl Faced Type IV Part #: 08036093930 Manufacturer: DHS **See Page 28 Diagram 2**	1	EA	$14.95	$14.95
25.	#2518 42"x9" Sign Dbl Faced Type IV Part #: 08042093930 Manufacturer: DHS **See Page 28 Diagram 2**	10	EA	$17.45	$174.50
26.	#2520 36"x30" Blank, Bare, Universal Hole Pat. Part #: 0803630 Manufacturer: DHS **See Page 27 Diagram 1**	10	EA	$19.50	$195.00
27.	#2522 Sign, 30" School Xing Blank, Bare Part #: 08030P Manufacturer: DHS **See Page 31 Diagram 5**	20	EA	$16.25	$325.00
28.	#2524 Sign, Blank 24"x12" Blank, Bare Universal Hole Pattern Part #: 0802412 Manufacturer: DHS **See Page 29 Diagram 3**	20	EA	$5.20	$104.00

PRICE SHEET

Solicitation Number: **P16-0065**

Materials Management Procurement
9875 N. 85th Ave., 2nd Fl.
Peoria, Arizona 85345-6560
Phone: (623) 773-7115
Fax: (623) 773-7118

Company Name:

Item	Description of material and/or services	Quantity	Unit	Unit Price	Extended Price
29.	#2990 Sign, STOP, 30"x30" .080 gauge, w/ High Intensity & Anti Graffiti Film Part#: R1-1 080303930 1LO Manufacturer: DHS **See Page 31 Diagram 5**	30	EA	$ 41.45	$ 1243.50
30.	#3031 30"x12" Sign, Blank Part#: 0803012 Manufacturer: DHS **See Page 31 Diagram 5**	1	EA	$ 6.50	$ 6.50
31.	#3100 24"x10" Sign, Blank w/ 2 3/8" holes, central on 24" Sides Part#: 0802410 Manufacturer: DHS **See Page 31 Diagram 5**	1	EA	$ 4.35	$ 4.35
32.	42"x9" Sign, Dbl Faced, .125 gauge, Type IV, White, Non-Punched Part#: 1254209 3930 Manufacturer: DHS	1	EA	$ 20.90	$ 20.90
33.	48"x9" Sign, Dbl Faced, .125 gauge, Type IV, White, Non-Punched Part#: 1254809 3930 Manufacturer: DHS	1	EA	$ 23.90	$ 23.90
34.	36" Sign, Blank, School Xing, Punched Part#: 08036P Manufacturer: DHS **See Page 31 Diagram 5**	1	EA	$ 23.40	$ 23.40
35.	24"x9" Sign, Blank Part#: 082409 Manufacturer: DHS	1	EA	$ 3.90	$ 3.90
36.	36" Sign, Blank, Round, Punched 1 ½ " from Top and Bottom Part#: 08036C Manufacturer:	1	EA	$ 23.40	$ 23.40
37.	36" Sign, Blank, Yield, Punched 1 ½" from Top and Bottom Part#: 08036TR1 Manufacturer: DHS	1	EA	$ 10.50	$ 10.50
38.	36"x36" Sign, Blank, Square and Diamond (hole patterns) Part#: 0803636 Manufacturer: DHS **See Page 29 Diagram 3**	1	EA	$ 23.40	$ 23.40

PRICE SHEET

Solicitation Number: **P16-0065**

Materials Management Procurement
9875 N. 85th Ave., 2nd Fl.
Peoria, Arizona 85345-6560
Phone: (623) 773-7115
Fax: (623) 773-7118

Company Name:

Item	Description of material and/or services	Quantity	Unit	Unit Price	Extended Price
39.	18"x6" Sign, Blank Part#: 0801806 Manufacturer: DHS **See Page 27 Diagram 1**	1	EA	$1.95	$1.95
40.	24"x10" Sign, Blank Part#: 0802410 Manufacturer: DHS **See Page 27 Diagram 1**	1	EA	$4.30	$4.30
	Hardware				
	Note: The City is currently purchasing hardware from Zumar industries. The beginning number for each item represents the City of Peoria inventory number, and should not be mistaken for manufacturer numbers. The part numbers you need to cross reference are at the end of the description and are underlined.				
41.	#1008 Bracket, Sign Banding D022 - 50/box Part #: D022 Manufacturer: BAND-IT	2	BOX	$100	$200.00
42.	#1009 Bracket, Sign 134SF, 5 ¼" W Part #: 134SQF Manufacturer: HALL	1	EA	$6.00	$6.00
43.	#1011 Bracket, Sign 922SF, 5 ¼" W Part #: 134SQF2 Manufacturer: HALL	1	EA	$6.00	$6.00
44.	#1012 Bracket, Sign 990SF, 5 ¼" W Part #: 134SQF3 Manufacturer: HALL	1	EA	$6.00	$6.00
45.	Bracket, Sign 12" Round Part#: 2SQRD12 Manufacturer: HALL	1	EA	$12.00	$12.00
46.	Bracket, Sign 12" Square Part#: 134SQF12 Manufacturer:	1	EA	$12.00	$12.00
47.	Bracket, Sign 12" Cross Part#: 812F9DX Manufacturer: HALL	1	EA	$12.00	$12.00

PRICE SHEET

Solicitation Number: **P16-0065**

Materials Management Procurement
9875 N. 85th Ave., 2nd Fl.
Peoria, Arizona 85345-6560
Phone: (623) 773-7115
Fax: (623) 773-7118

Company Name:

Item	Description of material and/or services	Quantity	Unit	Unit Price	Extended Price
48.	#1013 Branding Metal 100'x.030 Ga. Part #: C209 Manufacturer: BAND-IT	8	EA	$ 58.75	$ 470.00
49.	#1015 Buckle, Sign Banding ½" Part #: C254 Manufacturer: BAND-IT 100/BOX	3	~~EA~~ BOX	$ ~~.43~~ 43.00	$ ~~1.29~~ 129.00
50.	#1016 Post, Square, 1 ¾" sq. x 144" 12 gauge Part #: 1375144 12GA Manufacturer: X2	1	EA	$ 40.95	$ 40.95
51.	#1018 Post, Square, 2" sq. x 30" long 12 gauge Part #: 230ANC12GA Manufacturer: X2	100	EA	$ 9.30	$ 930.00
52.	#1019 Post, Square, 1 ¾" sq. x 120" 12 gauge Part#: 1375120 12GA Manufacturer: X2	100	EA	$ 34.50	$ 3450
	Delivery shall be made 7-10 days ARO Discount offered off price sheet/catalog for signs 20 % Discount offered off price sheet/catalog for hardware 20 %				
	Subtotal:				$ 21,099.40
	Tax Rate 8.6 **% Taxes:**				$ ~~20,971.69~~ $ ~~1,803.59~~ $1814.55
	Total:				$ ~~22,775.26~~ 22,913.95

QUESTIONNAIRE

Solicitation Number: **P16-0065**

Materials Management Procurement
9875 N. 85th Ave., 2nd Fl.
Peoria, Arizona 85345-6560
Phone: (623) 773-7115
Fax: (623) 773-7118

Please list a minimum of three (3) clients whom the Materials Management Division may contact:

1. Company: ABBCO SIGN GROUP
   Contact: RANDY ABBOT
   Address: 8557 W POTTERS DR
   PEORIA AZ 85382
   Phone: 602-799-8285
   Email: ABBCO@COX.NET
   Type of Work: SIGN INSTALL contractor

2. Company: TOWN OF GILBERT
   Contact: Demetrius Fernandez
   Address: 900 E JUNIPER AVE
   GILBERT AZ 85234
   Phone: 480-503-6419
   Email: demetrius.fernandez@gilbertaz.gov
   Type of Work: PUBLIC WORKS

3. Company: SPEAR CONSTRUCTION
   Contact: KELLY LEWIS
   Address: PO BOX 10506
   GLENDALE AZ 85318
   Phone: 623-660-2215
   Email: KELLYLEWIS@SPEARARIZONA.COM
   Type of Work: contractor

Materials Management Procurement
9875 N. 85th Ave., 2nd Fl.
Peoria, Arizona 85345-6560
Phone: (623) 773-7115
Fax: (623) 773-7118

Bidder acknowledges that NO changes to the City's Insurance Requirements, Indemnification and Document Use requirements will be granted, and that any changes or modifications requested may result in the offeror's proposal being rejected.

☒ Yes ☐ No *If no, give reason below*

Bidder acknowledges acceptance of the City of Peoria's Standard Terms and Conditions and Special Terms and Conditions and takes no exceptions.

☒ Yes ☐ No *If no, give reason below*

Materials Management Procurement
9875 N. 85th Ave., 2nd Fl.
Peoria, Arizona 85345-6560
Phone: (623) 773-7115
Fax: (623) 773-7118

Has your firm been certified by any jurisdiction in Arizona as a minority or woman owned business enterprise? ☐ Yes ☒ No

If yes, please provide details and documentation of the certification.

Diagram 1

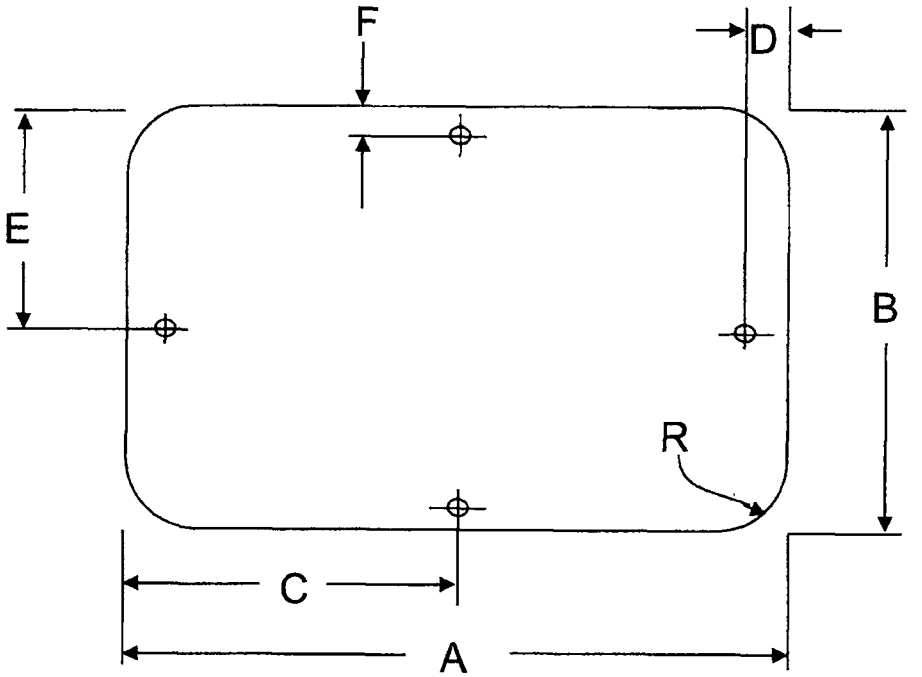

PS#	A	B	C	D	E	F	R	Gauge
966	18	12	9	3	6	3	1.500	.080
968	36	12	18	3	6	3	1.500	.080
971	24	18	12	3	9	3	1.500	.080
975	36	24	18	3	12	3	1.500	.080
976	48	24	24	3	12	3	1.875	.080
991	30	24	15	3	12	3	1.500	.080
2520	36	30	18	3	12	3	2.000	.080
2524	24	12	12	3	6	3	1.500	.080
	24	10	12			3	1.500	.080
	18	6	9	1 1/2	3	1 1/2	1.500	.080

(All dimensions are in inches)

Hole diameter is 3/8 inches unless otherwise noted

(Not to Scale)

Diagram 2

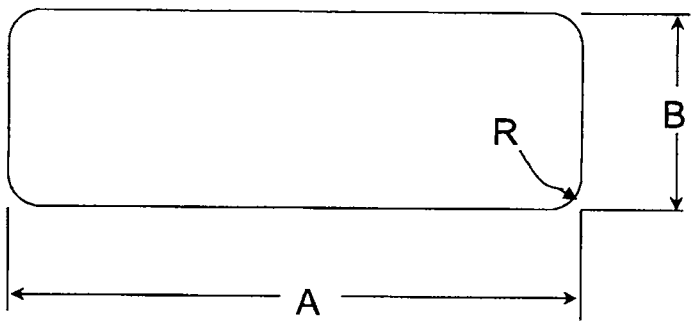

PS#	A	B	R	Gauge
960, 981	24	6	1	.080
982	30	6	1	.080
983	36	6	1	.080
984	42	6	1	.080
964, 985	48	6	1	.080
2515	24	9	1	.080
2516	30	9	1	.080
2517	36	9	1	.080
2518	42	9	1	.080
2519	48	9	1	.080

(All dimensions are in inches)

(Not to Scale)

Diagram 3

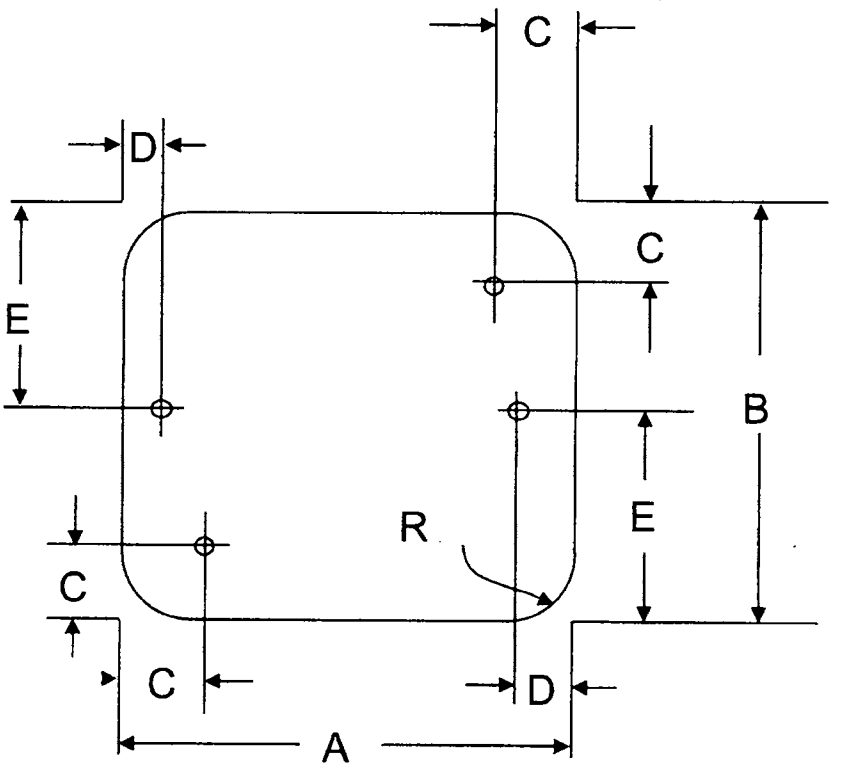

PS#	A	B	C	D	E	R	Gauge
970	18	18	3	3	9	2	.080
973	24	24	3	3	12	2	.080
977	30	30	4 1/2	3	15	2	.080
988	18	18	3	N/A	N/A	2	.080
	36	36	4 1/2	3	3	2	.080

(All dimensions are in inches)

Hole diameter is 3/8 inches unless otherwise noted

(Not to Scale)

Diagram 4

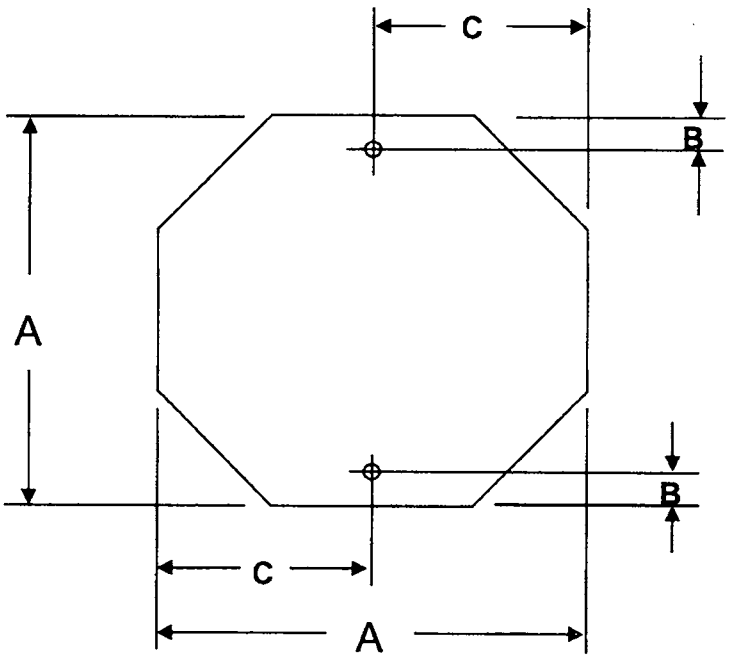

PS#	A	B	C	Gauge
2990	30	3	15	.080

(All dimensions are in inches)

Hole diameter is 3/8 inches unless otherwise noted

(Not to Scale)

Diagram 5

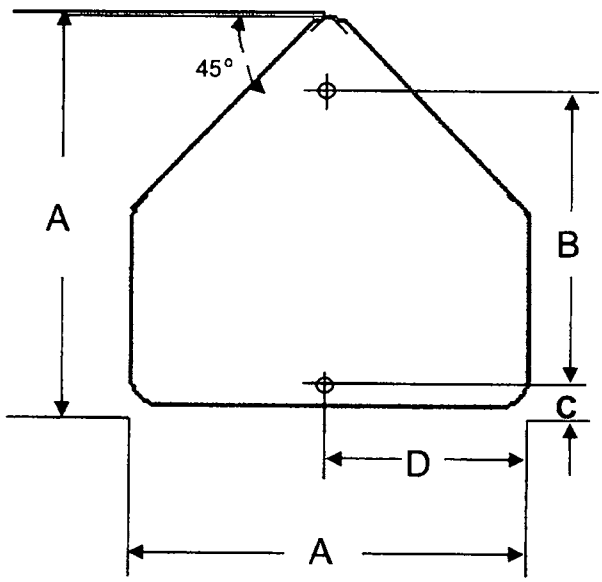

PS#	A	B	C	D	R	Gauge
2522	30	24	3	15	2	.080
	36	30	3	18	1.5	.080

(All dimensions are in inches)

Hole diameter is 3/8 inches unless otherwise noted

(Not to Scale)

ORIGINAL

CONTRACT AMENDMENT

Solicitation No. P16-0065 Page 1 of 1

Description: Street Signs and Hardware

Amendment No. One (1) Date: 10/19/16

Materials Management Procurement
9875 N. 85th Ave., 2nd Fl.
Peoria, AZ 85345
Telephone: (623) 773-7115
Fax: (623) 773-7118

Buyer: Terry Andersen

ACON26816 is agreed to by both parties and hereby being amended for items reduced on the price sheet. See attached revised price sheet summary.

Contractor hereby acknowledges receipt and agreement. A signed copy shall be filed with the City of Peoria, Materials Management Division.

Signature	Date	Typed Name and Title	Company Name
	11/4/16	Kevin DeRuiter, President	Desert Highway Signs Inc

Address	City	State	Zip Code
7150 W Roosevelt St., B-137	Phoenix	AZ	85043

Attested By:

Rhonda Geriminsky, City Clerk

CC Number

ACON26816A
Contract Number

City Seal
Copyright 2003
City of Peoria, Arizona

Director: Stuart Kent, Public Works-Utilities Director

Requestor: Adam Stapleton, Street Maintenance Supervisor

Approved as to Form:

City Attorney

The above referenced Contract Amendment is hereby Executed:

Nov. 8, 2016, at Peoria, Arizona

Dan Zenko, Materials Manager

Rev (05/09/16) CF

ACON26816A

P16-0065 Street Signs and Hardware Price Sheet Summary (revised 10/19/16)		Contract Amendment #1			
Item	Product Descripiton	Qty	Old Price	New Price	Delta
1	#960 Sign, Blank 24"x6"	40	$ 2.60		
2	#964 Sign, Blank 48"x6"	1	$ 5.20		
3	#965 Sign, Blank 12"x12"	1	$ 2.60		
4	#966 Sign, Blank 18"x12"	200	$ 3.90	$ 3.86	$ 0.04
5	968 Sign, Blank 36"x12"	110	$ 7.80	$ 7.72	$ 0.08
6	#970 Sign, Blank 18"x18"	20	$ 5.85		
7	#971 Sign, Blank 24"x18"	150	$ 7.80		
8	#973 Sign, Blank 24"x24"	23	$ 10.40	$ 10.30	$ 0.10
9	#975 Sign, Blank 36"x24"	30	$ 15.60	$ 15.44	$ 0.16
10	#976 Sign, Blank 48"x24"	10	$ 20.80	$ 20.59	$ 0.21
11	#977 Sign, Blank 30"x30"	120	$ 16.25	$ 16.10	$ 0.15
12	#979 Sign, Blank Bare 36"x36"	13	$ 23.40	$ 23.20	$ 0.20
13	#981 Sign, 24"x6" Dbl Face	40	$ 6.65		
14	#982 Sign, 30"x6" Dbl Face	20	$ 8.30		
15	#983 Sign, 36"x6" Dbl Face High Intensity White	1	$ 9.95		
16	#984 Sign, 42"x6" Dbl Face High Intensity White	1	$ 11.65		
17	#985 Sign, 48"x6" Dbl Face High Intensity White	10	$ 13.30		
18	#988 Sign, 18"x18" OM4-2 Type IV Hi Intensity w/ Graffiti	10	$ 14.95		
19	#991 Sign, Blank 30"x24"	280	$ 22.90		
20	#2064 Sign, Blank, Bare 48"x 30"	1	$ 26.00	$ 25.74	$ 0.26
21	#2480 Sign, Blank 48"x 36" No Holes	1	$ 31.20	$ 30.88	$ 0.32
22	#2515 24"x9" Sign Dbl Faced Type IV	20	$ 9.90		
23	#2516 30"x9" Sign Dbl Faced Type IV	1	$ 12.50		
24	#2517 36"x9" Sign Dbl Faced Type IV	1	$ 14.95		
25	#2518 42"x9" Sign Dbl Faced Type IV	10	$ 17.45		
26	#2520 36"x30" Blank, Bare, Universal Hole Pat	10	$ 19.50	$ 19.30	$ 0.20
27	#2522 Sign, 30" School Xing Blank, Bare	20	$ 16.25		
28	#2524 Sign, Blank 24"x12" Blank, Bare Universal Hole Pattern	20	$ 5.20	$ 5.15	$ 0.05
29	#2990 Sign, STOP, 30"x30" .080 gauge, w/ High Intensity & Anti Graffiti Film	30	$ 41.45	$ 37.60	$ 3.85
30	#3031 30"x12" Sign, Blank	1	$ 6.50	$ 6.43	$ 0.07
31	#3100 24"x10" Sign, Blank w/ 2 3/8" holes, central on 24" Sides	1	$ 4.35		
32	42"x9" Sign, Dbl Faced, .125 gauge, Type IV, White, Non-Punched	1	$ 20.90		
33	48"x9" Sign, Dbl Faced, .125 gauge, Type IV, White, Non-Punched	1	$ 23.90		
34	36" Sign, Blank, School Xing, Punched	1	$ 23.40		
35	24"x9" Sign, Blank	1	$ 3.90		
36	36" Sign, Blank, Round, Punched 1 ½ " from Top and Bottom	1	$ 23.40	$ 23.16	$ 0.24
37	36" Sign, Blank, Yield, Punched 1 ½" from Top and Bottom	1	$ 10.50	$ 10.03	$ 0.47
38	36"x36" Sign, Blank, Square and Diamond (hole patterns)	1	$ 23.40	$ 23.16	$ 0.24
39	18"x6" Sign, Blank	1	$ 1.95		
40	24"x10" Sign, Blank	1	$ 4.30		
41	#1008 Bracket, Sign Banding D022 - 50/box	2	$ 100.00		
42	#1009 Bracket, Sign 134SF, 5 ¼" W	1	$ 6.00		
43	#1011 Bracket, Sign 922SF, 5 ¼" W	1	$ 6.00		
44	#1012 Bracket, Sign 990SF, 5 ¼" W	1	$ 6.00		
45	Bracket, Sign 12" Round	1	$ 12.00		
46	Bracket, Sign 12" Square	1	$ 12.00		
47	Bracket, Sign 12" Cross	1	$ 12.00		
48	#1013 Branding Metal 100'x.030 Ga.	8	$ 58.75		
49	#1015 Buckle, Sign Banding ½" - 100/box	3	$ 43.00		
50	#1016 Post, Square, 1 ¾" sq. x 144" 12 gauge	1	$ 40.95		
51	#1018 Post, Square, 2" sq. x 30" long 12 gauge	100	$ 9.30		
52	#1019 Post, Square, 1 ¾" sq. x 120" 12 gauge	100	$ 34.50		

ORIGINAL

CONTRACT AMENDMENT

Solicitation No: P16-0065 Page 1 of 1

Description: Street Signs and Hardware

Amendment No: Two (2) Date: 02/27/17

Materials Management Procurement
9875 N. 85th Ave., 2nd Fl.
Peoria, AZ 85345
Telephone: (623) 773-7115
Fax: (623) 773-7118

Buyer: Terry Andersen

In accordance with the Contract Special Terms and Conditions, Contract Extension, the above referenced contract shall expire on June 23, 2017 and is hereby extended.

The New Contract Term is: **June 24, 2017** to **June 23, 2018**

Contractor hereby acknowledges receipt and agreement. A signed copy shall be filed with the City of Peoria, Materials Management Division.

Signature	Date	Typed Name and Title	Company Name
	3/13/17	Kevin DeRuiter, President	Desert Highway Signs Inc

Address	City	State	Zip
7150 W Roosevelt St., B-137	Phoenix	AZ	85043

Attested by:

Rhonda Geriminsky, City Clerk

CC Number

ACON26816B
Contract Number

City Seal
Copyright 2003
City of Peoria, Arizona

Director: Stuart Kent, Public Works-Utilities Director

Project Manager: Adam Stapleton,
Street Maintenance Supervisor

Approved as to Form:

Steve Burg, City Attorney

The above referenced Contract Amendment is hereby Executed:

March 23, 2017, at Peoria, Arizona

Dan Zenko, Materials Manager

Rev (12/14/16) CF

CONTRACT AMENDMENT

Solicitation No: P16-0065 Page 1 of 1

Description: Street Signs and Hardware

Amendment No: Three (3) Date: 07/27/17

Materials Management Procurement
9875 N. 85th Ave., 2nd Fl.
Peoria, AZ 85345
Telephone: (623) 773-7115
Fax: (623) 773-7118

Buyer: Terry Andersen

ACON26816 is hereby amended to remove the following line item from the contract.

Page 22, Hardware, Item 41., #1008 Bracket, Sign Banding D022 – 50 box

Contractor hereby acknowledges receipt and agreement. A signed copy shall be filed with the City of Peoria, Materials Management Division.

Signature	Date	Typed Name and Title	Company Name
	8/15/17	Kevin DeRuiter, President	Desert Highway Signs Inc

Address	City	State	Zip
7150 W Roosevelt St B-137	Phoenix	AZ	85043

Attested by:

Rhonda Geminsky, City Clerk

CC Number

ACON26816C
Contract Number

City Seal
Copyright 2003
City of Peoria, Arizona

Director: Stuart Kent, Public Works-Utilities Director

Department Rep: Adam Stapleton – PW-UT Street Maintenance Supervisor

Approved as to Form:

Steve Burg, City Attorney

The above referenced Contract Amendment is hereby Executed:

8-24, 2017, at Peoria, Arizona

Dan Zenko, Materials Manager

Rev (12/14/10) CF

CONTRACT AMENDMENT

Solicitation No: P16-0065 Page 1 of 1

Description: Street Signs and Hardware

Amendment No: Four (4) Date: 10/16/17

Materials Management Procurement
9875 N. 85th Ave., 2nd Fl.
Peoria, AZ 85345
Telephone: (623) 773-7115
Fax: (623) 773-7118

Buyer: Terry Andersen

ACON26816 is hereby being amended to remove the following line item from the contract.

Page 22, Hardware, Item 49., #1015 Banding Buckle ½" – 100 box

Contractor hereby acknowledges receipt and agreement. A signed copy shall be filed with the City of Peoria, Materials Management Division.

Signature	Date	Typed Name and Title	Company Name
	10/25/17	Kevin DeRuiter, President	Desert Highway Signs Inc.

Address	City	State	Zip
7150 W Roosevelt St B-137	Phoenix	AZ	85043

Attested by:

Rhonda Geriminsky, City Clerk

CC Number

ACON26816D

Contract Number

City Seal
Copyright 2003
City of Peoria, Arizona

Director: Stuart Kent, Public Works-Utilities Director

Project Manager: Adam Stapleton – Street Maintenance Supervisor

Approved as to Form:

Steve Burg, City Attorney

The above referenced Contract Amendment is hereby Executed:

Nov. 1, 2017, at Peoria, Arizona

Dan Zenko, Materials Manager

Rev (12/14/16) CF

CONTRACT AMENDMENT

Solicitation No: P16-0065 Page 1 of 2

Description: Street Signs and Hardware

Amendment No: Five (5) Date: 03/08/18

Materials Management
Procurement
9875 N. 85th Ave., 2nd Fl.
Peoria, AZ 85345
Telephone: (623) 773-7115
Fax: (623) 773-7118

Buyer: Terry Andersen

The above mentioned contract is hereby amended as follows:

Interwest Safety Supply, LLC has acquired Desert Highway Signs, Inc. as of January 31, 2018 and agrees to accept the contract terms and conditions and pricing as is, per attached.

Contractor hereby acknowledges receipt and agreement. A signed copy shall be filed with the City of Peoria, Materials Management Division.

Signature	Date	Typed Name and Title	Company Name
	3/21/18	Kevin DeRuiter, Reg Mgt	Interwest Safety Supply, LLC

Address	City	State	Zip
1714 W Lincoln Street	Phoenix	AZ	85007

Attested by:

Linda L Blas for
Rhonda Geriminsky, City Clerk

CC Number

ACON26816E
Contract Number

City Seal
Copyright 2003
City of Peoria, Arizona

Director: Stuart Kent, Public Works-Utilities Director

Department Rep: Adam Stapleton, Street Maintenance Supervisor

Approved as to Form:
Cheryl Boos for
Steve Burg, City Attorney

The above referenced Contract Amendment is hereby Executed:

March 26, 2018, at Peoria, Arizona

Dan Zenko
Dan Zenko, Materials Manager

Rev (12/14/16) CF

CONTRACT AMENDMENT

Solicitation No: P16-0065 Page 1 of 1

Description: Street Signs and Hardware

Amendment No: Six (6) Date: 04/02/18

Materials Management Procurement
9875 N. 85th Ave., 2nd Fl.
Peoria, AZ 85345
Telephone: (623) 773-7115
Fax: (623) 773-7118

Buyer: Terry Andersen

In accordance with the Contract Special Terms and Conditions, Contract Extension, the above referenced contract shall expire on June 23, 2018 and is hereby extended. **EXTENSION #2**

The New Contract Term is: **June 24, 2018** to **June 23, 2019**

Contractor hereby acknowledges receipt and agreement. A signed copy shall be filed with the City of Peoria, Materials Management Division.

Signature	Date	Typed Name and Title	Company Name
	4/30/18	Kevin DeRuiter, Regional Manager	Interwest Saftety Supply, LLC

Address	City	State	Zip
1714 W Lincoln Street	Phoenix	AZ	85007

Attested by:

Rhonda Geriminsky, City Clerk

CC Number

ACON26816F
Contract Number

City Seal
Copyright 2003
City of Peoria, Arizona

Director: Stuart Kent, Public Works-Utilities Director

Project Manager: Adam Stapleton, Street Maintenance Supervisor

Approved as to Form:

Steve Burg, City Attorney

The above referenced Contract Amendment is hereby Executed:

May 2, 2018, at Peoria, Arizona

Dan Zenko, Materials Manager

Rev (12/14/16) CF

Interwest Safety Supply, LLC ("Interwest") is pleased to announce the acquisition of Desert Highway Signs, Inc. ("DHS") as of January 31, 2018.

Headquartered in Provo, Utah, Interwest is a leading manufacturer and distributor of highway signage and roadway safety products in the Western United States serving state DOT agencies, road contractors, general contractors, municipalities, airports, schools, universities, law enforcement, rental companies, and private industry. With the acquisition of Desert Highway Signs, Interwest becomes the leading provider of DOT signs and safety products in Arizona with a complete one-stop product offering to meet the market needs.

Kevin DeRuiter, President of DHS said, "We are excited to join the Interwest family and believe the combination of our two businesses will provide a comprehensive competitive product offering in Arizona and adjacent markets."

Doug Larson, President of Interwest said, "I'm thrilled to add industry veterans Kevin DeRuiter and Jerod Hayes to the Interwest team. Their industry knowledge and skillsets will be invaluable as we expand throughout the Southwest."

Desert Highway Managers will continue to provide you with industry leading customer support operating under the name of Interwest Safety Supply.

Sincerely,

Kevin DeRuiter
President
Desert Highway Signs, Inc.

7150 W Roosevelt St, B-137, Phoenix, Arizona 85043
Tel: (623) 215-7332 | Fax: (623) 243-5706 | email: info@deserthighwaysigns.com
www.deserthighwaysigns.com